DATASHEET

AL-35

Intel® Alder Lake/Raptor Lake U Series Processor based 3.5" Disk Size Motherboard

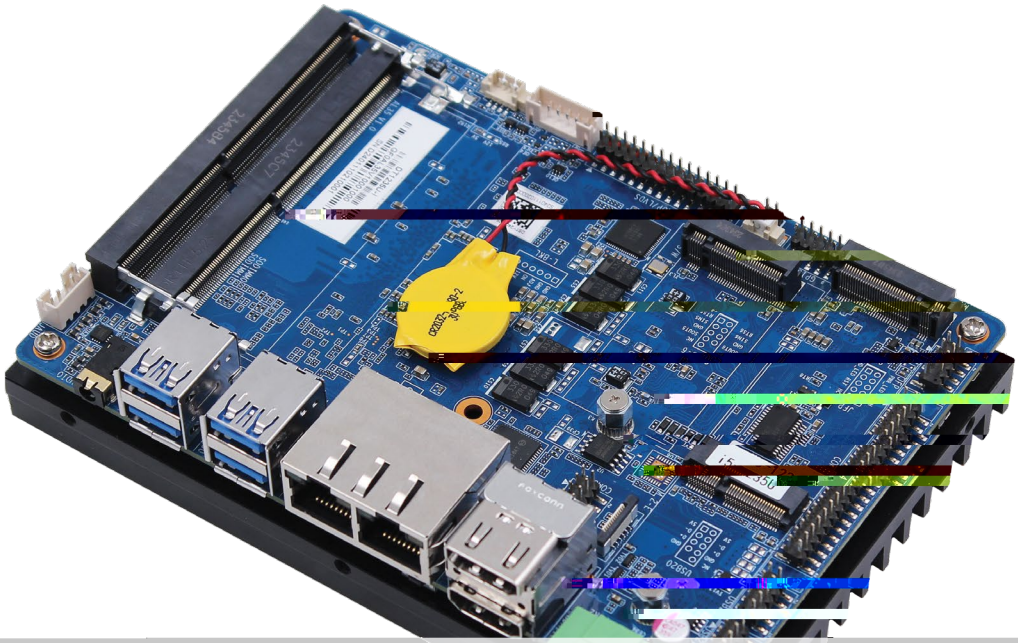

Features

- CPU: Intel® Alder Lake/Raptor Lake U Series Processor
- Memory: Dual Channel SO-DIMM DDR4 up to 64GB
- Display: Integrated Graphics display via 2xHDMI®, eDP/LVDs
- Ethernet: 1xIntel® i219(1.0G)+ 1xIntel® i210(1.0G)
- Storage: SATA, M.2_2242 for SATA/4G, M.2_2280 for NVMe
- Expansion: M.2 for Wi-Fi
- Power: 9V-35V(2-Pin DC-IN Phoenix Connector)

Maxtang®

MAXIMIZING YOUR COMPUTING PRODUCTIVITY

Functional Block Diagram

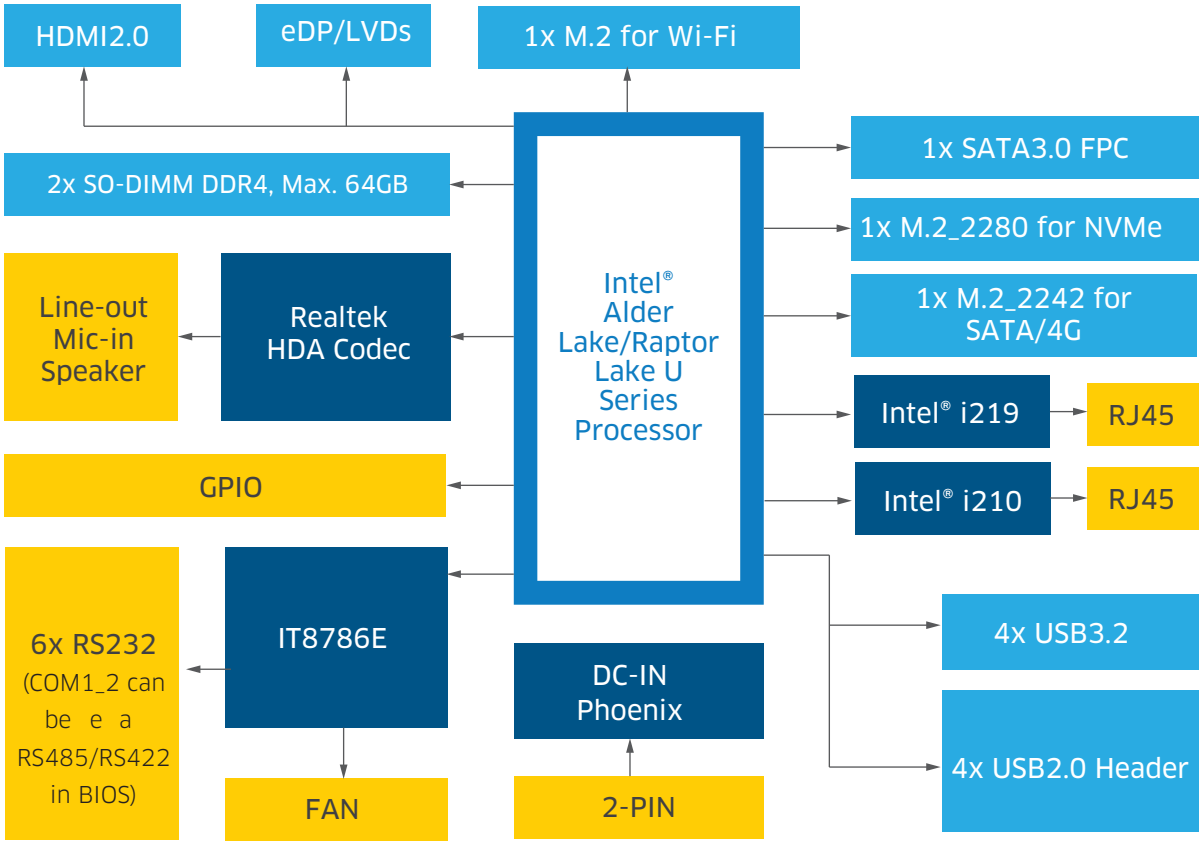

Order Information

Model Name	Description
DT1235U-I	DT Intel Core-i5 1235U AL35V1.0 2DDR4 2LAN 6*RS232 2HDMI®+LVDS

*For customized options, please consult regional sales. And please confirm the model name and description before purchasing. *The model name and description might vary due to inventory changes.

HDMI™
HIGH-DEFINITION MULTIMEDIA INTERFACE

Copyright ©2023 Maxtang Technology Co. Ltd. All rights reserved. All data is for information purposes only and not guaranteed for legal purposes. Information has been carefully checked and is believed to be accurate however, no responsibility is assumed for inaccuracies. Maxtang and the Maxtang logo and all other trademarks or registered trademarks are the property of their respective owners and are recognized.*The terms HDMI, HDMI High-Definition Multimedia Interface, HDMI Trade dress, and HDMI Logos are trademarks or registered trademarks of HDMI Licensing Administrator, Inc.

Maxtang®
MAXIMIZING YOUR COMPUTING PRODUCTIVITY

SHENZHEN MAXTANG COMPUTER CO. LTD.
6/F, Bldg 3, Honghui Indl Park, Liuxian 2nd Road, Bao'an Dist, Shenzhen, China 518101
Tel.: +86 755 86143003 I Fax: +86 755 86143003 I sales@datangpc.com

www.maxtangpc.com